AQUILON
TECHNOLOGIES INC.

SA 84

THREE POINT HITCH TWO STAGE SNOWBLOWER

MODELS STARTING AT SERIAL NO. 0300101

11/93
OM 0054

TABLE OF CONTENTS

	PAGE
INTRODUCTION	2
SAFETY PRECAUTIONS	3
SAFETY DECALS	5
ASSEMBLY	
STEP 1: DRIVELINE INSTALLATION	6
STEP 2: 3 POINT HITCH INSTALLATION	6
STEP 3: SNOWBLOWER INSTALLATION	8
STEP 4: MANUAL ROTATION INSTALLATION	10
STEP 5: HYDRAULIC ROTATION WITH CYLINDER	12
OPERATION	
Preparing for Snow Removal	14
Operating Controls	14
Adjustments	14
Snow Removal Methods	15
MAINTENANCE	16
PARTS	
Snowblower, chute and hitch assembly	17
Manual chute rotation	20
Hydraulic chute rotation	21
Double auger conversion	22
Cutting edge and skid shoes	23
Gear box (656835)	24
P.T.O. Shaft (656864)	25
Decals	27
TORQUE SPECIFICATION TABLE	inside back cover

INTRODUCTION

TO THE PURCHASER

This new snowblower was carefully designed to give you years of dependable service.

This manual has been provided to assist in the safe operation and service of your new snowblower.

NOTE: All photographs and illustrations in the manual are intended for reference only and are based on the latest product information available at the time of publication.

Familiarize yourself fully with the safety recommendations and operating procedures before operating the machine. Carefully read, understand and follow these recommendations and make sure other operators of the machine understand safe operation.

This symbol, the industry's "Safety Alert Symbol" is used throughout this manual and on the snowblower's safety labels to warn of the possibility of personal injury. AQUILON requests that you take special care in reading and understanding the safety precautions before operating the snowblower or the tractor.

Record your snowblower serial number and model below. Your dealer requires this information to give you prompt efficient service when ordering parts or attachments. Service with genuine AQUILON parts when replacement parts are required.

Right hand and left hand are determined by sitting on the tractor seat facing forward.

MODEL _____ **SERIAL NUMBER** _____ **DATE PURCHASED**

SAFETY PRECAUTIONS

Careful operation is your best insurance against an accident. Read this section carefully before operating the tractor and snowblower. All operators, no matter how experienced they may be, should read this and other related manuals before operating the snowblower. It is the owner's legal obligation to instruct all operators in safe operation.

BEFORE OPERATION

This symbol, the industry's "Safety Alert Symbol", is used throughout this manual and on the snowblower's safety labels to warn of the possibility of personal injury. Aquilon requests that you take special care in reading and understanding the safety precautions before operating the snowblower or the tractor.

1. Read and understand this Operator's Manual and the tractor Operator's Manual. Know how to operate all controls and how to stop the unit and disengage the controls quickly.

2. Never allow other persons to operate the equipment without proper instruction. Never allow children to operate the equipment.

3. Keep the area of operation clear of all bystanders, especially small children and pets.

4. Never wear loose, torn, or bulky clothing around the tractor and snowblower. It may catch on moving parts or controls leading to the risk of accident. Use additional safety items - hard hat, safety boots or shoes, eye and hearing protection, gloves, etc. - as appropriate or required.

5. Before the snow season, thoroughly inspect the area where the equipment is to be used and remove all door mats, sleds, boards, wires and other foreign objects.

6. Disengage clutch and PTO, and shift into neutral before starting the engine.

7. Do not 8.operate equipment without wearing adequate winter outer garments.

8. Adjust collector housing height to clear gravel or crushed rock surface.

9. Never attempt to make any adjustments while engine is running.

10. Do not work under a raised snowblower.

11. Escaping hydraulic/diesel fluid under pressure can penetrate the skin. Use a piece of cardboard or paper rather than the hands to search for leaks.

OPERATION

1. Make sure the PTO (Power Take off) is attached properly before operation.

2. Before dismounting, take all possible precautions. Disengage PTO, lower the attachment, shift into neutral, set the parking brake, stop the engine, and remove the key.

3. Before starting, remove any ice that has accumulated in the auger and fan.

4. Watch carefully for foreign objects that could enter the blower while operating.

5. Make sure that the PTO is in the **NEUTRAL** position before starting engine.

6. Do not put hands or feet near rotating parts. Keep clear of discharge opening at all times.

7. Exercise extreme caution when operating on or crossing a gravel drive, walks, or roads. Stay alert for hidden hazards of traffic. Do not carry passengers.

   Use a piece of wood or stick to unplug spout. Do not use hands or feet.

9. Use adequate safety warning lights. Check local regulations.

10. Stop the engine, remove the key, set the parking brake, and allow the rotation parts to stop before unclogging the collector/impeller housing or discharge guide, and before making any repairs, adjustments or inspections.

11. If the snowblower starts to vibrate abnormally, stop the engine immediately, and check for the cause.Excessive vibration is generally a sign of trouble.

12. Do not run the engine indoors except when starting engine and transporting snowblower in or out of building. Do not operate or idle engine in a non-ventilated area. Carbon monoxide gas is colourless, odourless and deadly.

13. Do not clear slopes. Exercise extreme caution when changing direction on slopes. Do not attempt to clear steep slopes.

14. Never operate snowblower without guards, plates, and other safety protective devices in place.

15. Never operate snowblower near glass enclosures, automobiles, window wells, embankments, etc., without proper adjustment of snow discharge angle.

16. Never operate machine at high transport speeds on a slippery surface.

17. Use extra caution when backing up.

18. Do not direct discharge at bystanders or animals. Ejected objects may cause injury

19. Disengage power to auger/fan when transporting or when not in use.

20. Never operate the snowblower without good visibility and lighting.

21. Use only approved tire chains and wheel weights for better traction and stability.

22. Prolonged exposure to loud noise can cause impairment or loss of hearing. Wear a suitable hearing protective device such as earmuffs or earplugs to protect against objectionable or uncomfortable noises.

WHENEVER YOU SEE THIS SYMBOL:

IT MEANS:

ATTENTION!

BECOME ALERT!

YOUR SAFETY IS INVOLVED!

SAFETY DECALS

REPLACE IMMEDIATELY IF DAMAGED

CHUTE BASE

MISE EN GARDE

NÉGLIGER DE SUIVRE LES PROCÉDURES SÉCURITAIRES D'UTILISATION PEUT ENTRAÎNER DES BLESSURES.

- POUR UNE UTILISATION SÉCURITAIRE SUIVRE TOUTES LES INSTRUCTIONS D'UTILISATION ET PRÉCAUTIONS SÉCURITAIRES DANS LE MANUEL DE L'OPÉRATEUR.
- PORTER DES LUNETTES DE SÉCURITÉ EN TOUT TEMPS.
- GARDER MAINS, PIEDS ET VÊTEMENTS ÉLOIGNÉS DES PIÈCES MOTRICES.
- ARRÊTER LE MOTEUR AVANT DE QUITTER LA POSITION DE L'OPÉRATEUR.
- ATTENDRE QUE TOUS LES MOUVEMENTS SOIENT ARRÊTÉS AVANT D'AJUSTER, LUBRIFIER, NETTOYER OU DÉBLOQUER LA MACHINE.
- GARDER L'ENDROIT DÉGAGÉ DE TOUTES PERSONNES ET ANIMAUX.
- GARDER TOUS LES ÉCRANS PROTECTEURS EN PLACE.
- JAMAIS DIRIGER L'ÉVACUATION VERS DES PIÉTONS, BÂTIMENTS, AUTOMOBILES, ETC.
- TOUJOURS UTILISER UN MASQUE À POUSSIÈRE DANS UN ENVIRONNEMENT POUSSIÉREUX.
- GARDER TOUTES LES MATIÈRES PLASTIQUES ÉLOIGNÉES DE LA CHALEUR INTENSE ET DES FLAMMES.
- NE JAMAIS PERMETTRE DE PASSAGERS SUR CETTE MACHINE.

230

DEFLECTOR

DANGER

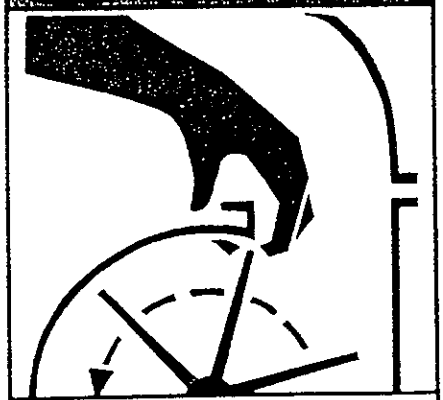

TO AVOID SERIOUS INJURY:
KEEP HANDS OUT OF THIS DISCHARGE CHUTE WHILE ENGINE IS RUNNING

POUR ÉVITER DES BLESSURES GRAVES:
GARDER LES MAINS ÉLOIGNÉES DE CETTE GOULOTTE LORSQUE LE MOTEUR EST EN MARCHE

86

DRIVELINE GUARD

DANGER

ROTATING DRIVELINE
CONTACT CAN CAUSE DEATH
KEEP PEOPLE AND CLOTHING WELL CLEAR

DO NOT OPERATE WITHOUT–

- ALL DRIVELINE, TRACTOR AND EQUIPMENT SHIELDS IN PLACE
- DRIVELINES SECURELY ATTACHED AT BOTH ENDS
- DRIVELINE SHIELDS THAT TURN FREELY ON DRIVELINE

TRANSMISSION ROTATIVE À CARDAN
TOUT CONTACT PEUT CAUSER LA MORT
TENIR VÊTEMENTS ET PERSONNES À L'ÉCART

NE PAS OPÉRER SANS–

- QUE TOUS LES PROTECTEURS DU TRACTEUR DE L'ÉQUIPEMENT ET DE L'ARBRE À CARDAN SOIENT EN PLACE
- L'ARBRE À CARDAN FIXÉ SOLIDEMENT À CHAQUE BOUT
- QUE LES PROTECTEURS TOURNENT LIBREMENT SUR L'ARBRE À CARDAN

88

CHUTE BASE

WARNING

FAILURE TO FOLLOW SAFE OPERATING PROCEDURES MAY RESULT IN INJURY.

- FOR SAFE OPERATION FOLLOW ALL OPERATING INSTRUCTIONS ANS SAFETY PRECAUTIONS IN OPERATOR'S MANUAL.
- EYE PROTECTION MUST BE WORN AT ALL TIMES.
- KEEP HANDS, FEET AND CLOTHING AWAY FROM POWER DRIVEN PARTS.
- STOP ENGINE BEFORE LEAVING OPERATOR POSITION.
- WAIT FOR ALL MOVEMENTS TO STOP BEFORE STARTING TO ADJUST, LUBRICATE, CLEAN OR UNCLOG THE MACHINE.
- KEEP THE AREA OF OPERATION CLEAR OF ALL PERSONS AND ANIMALS.
- KEEP ALL GUARDS AND SHIELDS IN PLACE.
- NEVER DIRECT DISCHARGE TOWARD BYSTANDERS, BUILDINGS, CARS ETC.
- ALWAYS USE A DUST MASK WHEN WORKING IN DUSTY CONDITIONS.
- KEEP PLASTIC MATERIALS AWAY FROM INTENSE HEAT AND OPEN FLAME.
- NEVER ALLOW PASSENGERS ON THE ATTACHMENT.

229

RIGHT SIDE OF COLLECTOR

IMPORTANT
Before using:
- Oil level must be checked
- Fill with "AGMA No 5 EP" extreme pressure oil
- Read instructions manual

IMPORTANT
Avant usage:
- Vérifier niveau d'huile.
- Remplir avec de l'huile pour extrême pression "AGMA No 5 EP"
- Lire manuel d'instructions

21

TOP OF HOUSING

DANGER

AVOID INJURY FROM ROTATING AUGER
KEEP HANDS, FEET AND CLOTHING AWAY

POUR ÉVITER DES BLESSURES GRAVES:
GARDER LES MAINS, LES PIEDS ET LES VÊTEMENTS ÉLOIGNÉS DES VIS SANS FIN

87

ASSEMBLY

The snowblower is assembled at the factory, however, tractor mounting kit must be assembled. Open carton and lay out all parts for assembly. Separate bolts and nuts into various sizes.
After assembly, torque all bolts according to the Torque Specification Table inclosed at the end of the manual.
Right and left are determined by facing in direction snowblower will travel when in use.

STEP 1: DRIVELINE INSTALLATION

a) Remove paint from blower drive shaft (fig.1, item 1) and grease driveline sliding surfaces and yoke.

b) Slide driveline yoke over drive shaft (fig.1, item 2) using the sliding action of the driveline. Make sure the driveline locking collar is well secured to the drive shaft.

STEP 2: 3 POINT HITCH INSTALLATION

a) Remove two bolts and lockwashers from rear of gear box (fig.1, items 5-6) and install driveline shield at that location (fig.1, item 4). Replace bolts and lockwashers.

b) Install the lower hitch tubes (fig.1, item 7) on blower using a 3/4 x 4" bolt (fig.1, item 8), lockwashers & nuts (fig.1, item 9).

NOTE: Attaching arms have two holes. Use holes depending on tractor lower link length to provide a minimum of 6" overlap of driveline sliding sections when snowblower is attached.

c) Install the two hitch arms (fig.1, items 10 & 11) to the upper hitch (fig.1, item 12) through the top hole using a 3/4" x 4 " bolt (fig 1, item 13), lockwasher and nut (fig.1, item 14).

d) Attach each hitch arm (fig.1, items 10 & 11) inside the hitch tubes (fig.1, item 7) using two 3/4" x 2" bolts (fig.1, item 15), lockwashers and nuts (fig.1, item 16).

e) Attach upper hitch (fig.1, item 12) to blower using a 3/4" x 2 " bolt (fig.1, item 17), lockwasher (fig.1, item 18) & nut (fig.1, item 19) (lockwasher on top side).

NOTE: We recommend you install the storage chain only when you have the intention of storing your snowblower. Functioning your snowblower with it attached may be hazardous.

f) Install the driveline storage chain in the small hole in each hitch arm (fig.1, items 10 - 11) using two "S" hooks. Using pliers, close "S" hooks, leave one side of one "S" hook open (to attach and detach).

g) Attach driveline shield safety chain in same hole position as the "S" hook of section j.

h) Install and bolt the flatbar (fig.1, item 20) on the end of the lower hitch tubes (fig.1, item 7) with four 1/2" x 4" hex. bolts (fig.1, item 21), lockwashers and nuts (fig.1, item 22)

i) Torque all bolts according to the torque specification table.

ASSEMBLY

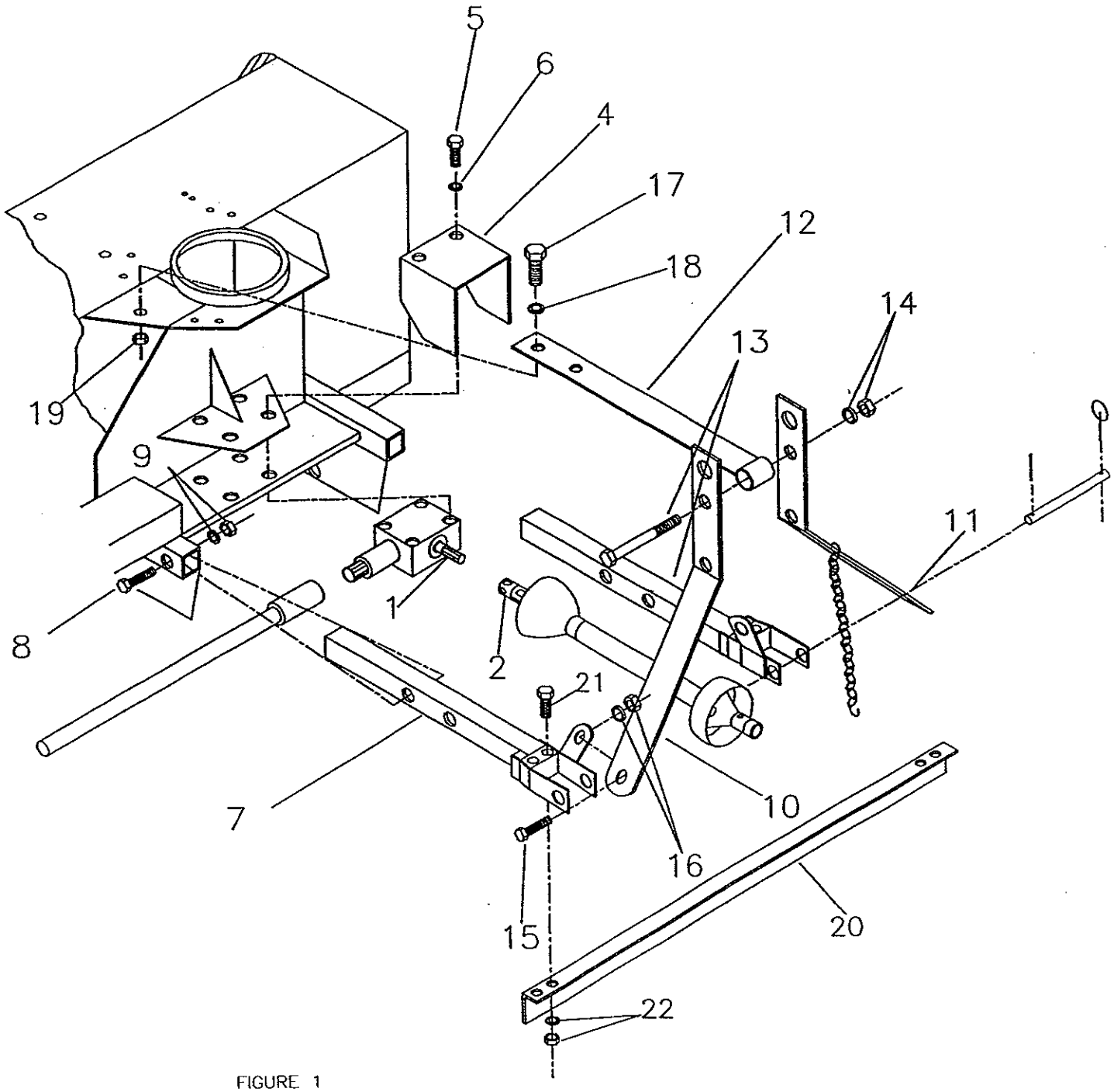

FIGURE 1

ASSEMBLY

STEP 3: SNOWBLOWER INSTALLATION

a) Attach tractor lower hitch arms (fig.2, item 1) to snowblower attaching arms (fig.2, item 7) using the hitch pins (fig.2, item 2) and secure with roll pins (fig.2, item 3) and linchpins (fig.2, item 4).

b) Install the tractor upper hitch (fig.2, item 5) in top hole of snowblower hitch arms (fig.2, item 9) using tractors pin (fig.2, item 6) and linchpin (fig.2, item 8).

c) To level snowblower front to back, adjust level using the tractor upper hitch (fig.2, item 5).

d) To level side to side, use levelling crank on right lower lift arm.

e) Set tractor anti-sway turnbuckles so that snowblower does not sway. Be sure the turnbuckles clear the tractor tires.

CAUTION: Before connecting snowblower driveline to tractor PTO shaft, make sure driveline is not too long in raised, lowered and middle position. If the driveline is too long it must be shortened (cut), to avoid damaged to tractor.

f) Connect driveline to tractor PTO shaft, making sure that the driveline locking collar is well secured to the tractor.

g) Secure driveline safety chain to tractor master shield to prevent driveline shield from rotating.

NOTE: Depending on tractor used, it may be necessary to install front tractor weights to maintain front end stability.

DETACHING SNOWBLOWER FROM TRACTOR

Select a level surface to detach. Remove driveline shaft and support it with chain. Detach top link using adjustment as required. Detach right lower link using adjustable link to assist if necessary. Detach left lower link.

If using manual chute rotation:

CAUTION: To avoid personal injury, check the full lifting range of the snowblower, to ensure that the chute rotation handle is clear of the operator's area when the snowblower is in raised position.

The safe operation of this machine is the responsibility of the operator. The operator should be familiar with the tractor and snowblower and all safety practices before starting operation.

IMPORTANT: To avoid damage to the snowblower, retorque all bolts after the first 10 hours of operation.

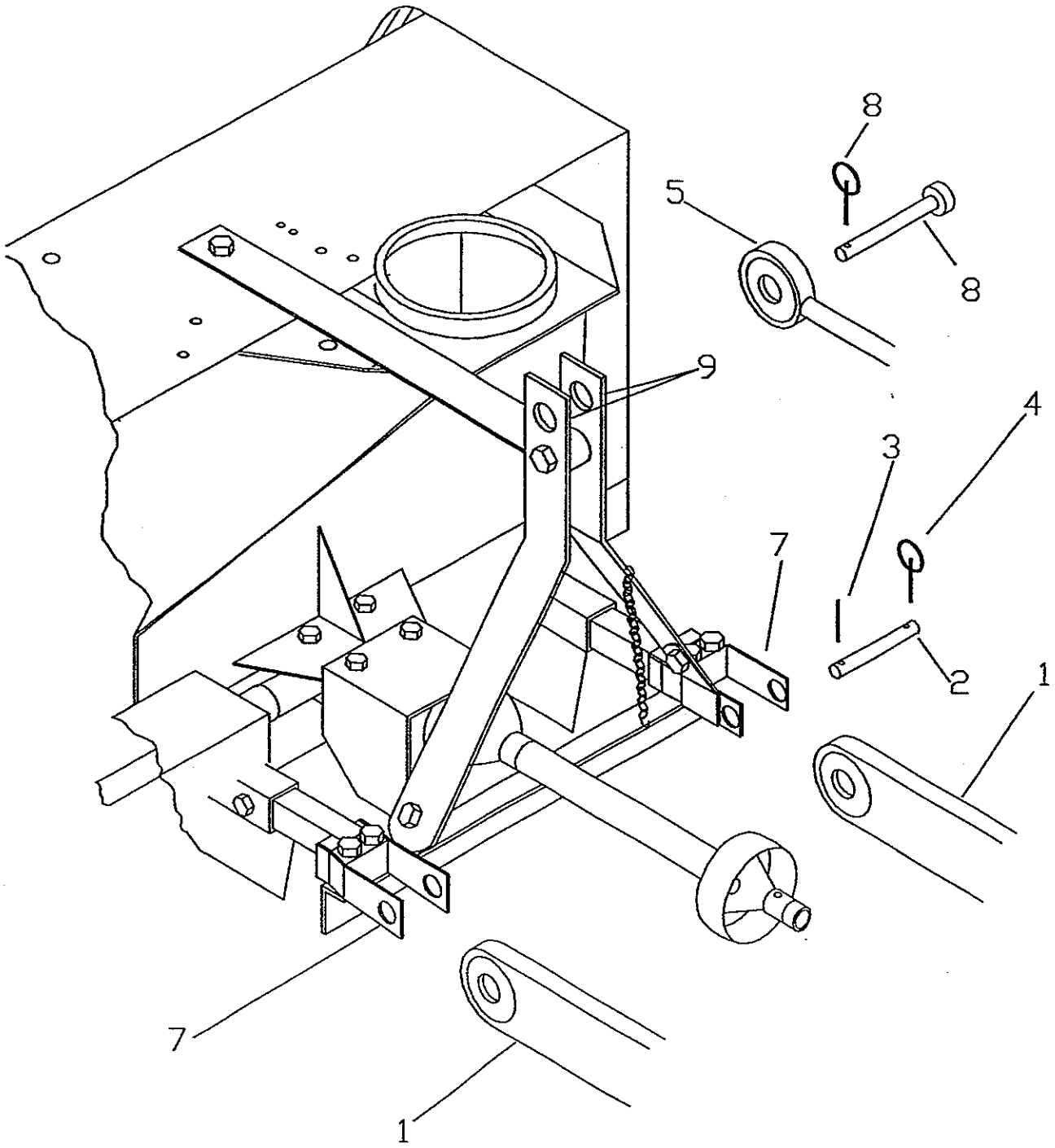

FIGURE 2

ASSEMBLY

STEP 4: MANUAL ROTATION INSTALLATION

a) Grease base of chute. Install chute over base of snowblower. Install three retaining plates using six 1/2" x 1" bolts (fig.3, item 3), lockwashers and nuts (fig.3, items 4-5).

b) Install manual rotation bracket (fig.3, item 10) on flatbar, left of chute. Secure with a 5/8" x 2 1/2" bolt (fig.3, item 7), two 11/16" flatwashers (fig.3, item 8) and nylon locknut (fig.3, item 9) on the left side, and 1/2" x 1 3/4" bolt (fig.3, item 6) with lockwasher and nut (fig.3, items 4-5)on the right side.

CAUTION: TO AVOID PERSONAL INJURY:
Check the full lifting range of the snowblower, to ensure that the chute rotation handle is clear of the operator's area when the snowblower is in raised position.

CABLE INSTALLATION

a) Place discharge chute with opening parallel to front of blower.

b) Turn chute opening towards the right (clockwise) approximately 40 degrees.

c) Tape ends of cable (fig.3, item 1) with electrical tape to keep ends from fraying.

d) Pass the cable thought the rotation tube (fig.3, item 11) keeping 8" spare and locking temporarily with the cable clamp (fig.3, item 2).

e) Turn the cable one full turn around the chute base in a clockwise direction.

f) Pass the cable thought the two small holes (fig.3, item 12) of the base of the chute, with a in and out motion.

g) Continue to route the cable by passing under the pulley (fig.3, item 13).

h) Turn the chute in the opposite direction (same previous angle) by turning the rotation handle (fig.3, item 14) (counter clockwise) keeping a proper cable tension with the free hand.

i) Detach the cable clamp (fig.3, item 2). Replace between the two holes securing the two ends of the cable. Be sure the ends of the cable are under proper tension.

ASSEMBLY

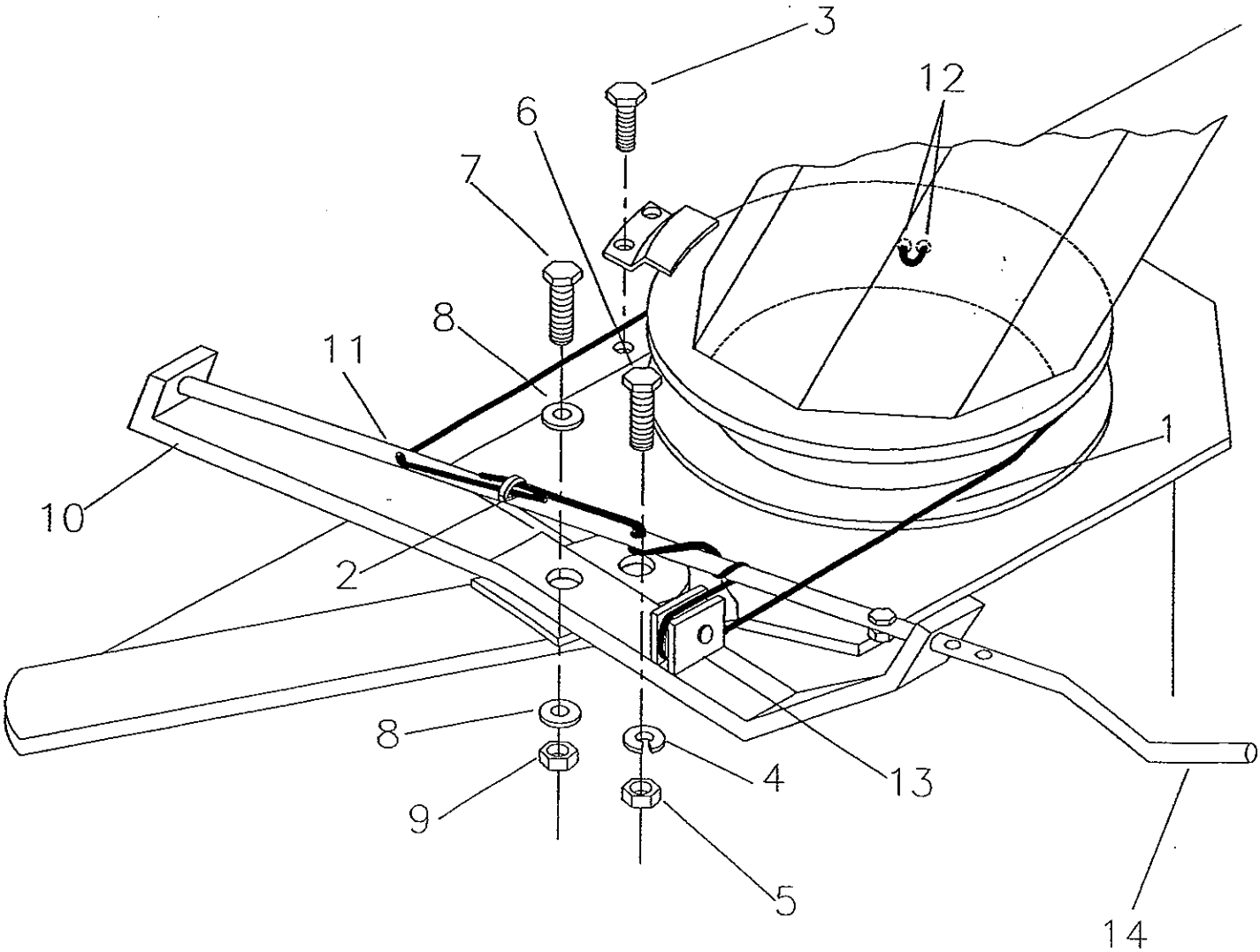

FIGURE 3

STEP 5: HYDRAULIC ROTATION WITH CYLINDER INSTALLATION

a) Install hydraulic rotation arm with pulleys (fig.4, item 1) to the left side of chute. Secure with a 5/8" x 2" bolt (fig.4, item 2), two 11/16" flatwashers (above the arm) and nylon locknut (fig.4, items 3-4). Tighten nut to remove end play but still allow arm to move.

b) Install cable holding arm (fig.4, item 5) on top of retaining plate using two 1/2" x 1 1/2" bolts (fig.4, item 6) lockwashers and nuts (fig.4, items 7-8). Tighten securely.

c) Drill a 9/16" dia. hole using the front cable holding arm as a guide. Insert a flatwasher (fig.4, item 12) between blower body and arm.

d) Insert one 1/2" x 2" bolt with drilled cable hole (fig.4, item 10) at each end of the cable holding arm (fig.4, item 5) with a 1/2"bushing (fig.4, item 11). Secure loosely with two lockwashers and nuts (fig.4, items 7-8).

e) Attach one end of 3" x 8" hydraulic cylinder to hydraulic rotation arm (fig.4, item 13) and the other end of cylinder on the snowblower cylinder fixation flatbar. Attach hose to remote outlets on tractor. Position arm with pulleys in center of travel.

CABLE INSTALLATION

a) Position the chute to blow directly in front of blower auger.

b) Tape ends of cable (fig.4, item 9) with electrical tape to keep ends from fraying.

c) Pass the cable thought the two small holes (fig.4, item 13) on the base of the chute from inside out.

d) Wind cable ends in opposite directions around the chute.

e) Pass cable around pulleys from outside to inside.

f) Insert the cable ends through special 1/2" x 2" bolts (fig.4, item 10).

g) With rotation arm in center of travel (parallel to snowblower ends) and chute positioned to blow directly in front of blower auger.

h) Tighten the cable at each bolt (fig.4, item 10) and tighten the nut (fig.4, item 8).

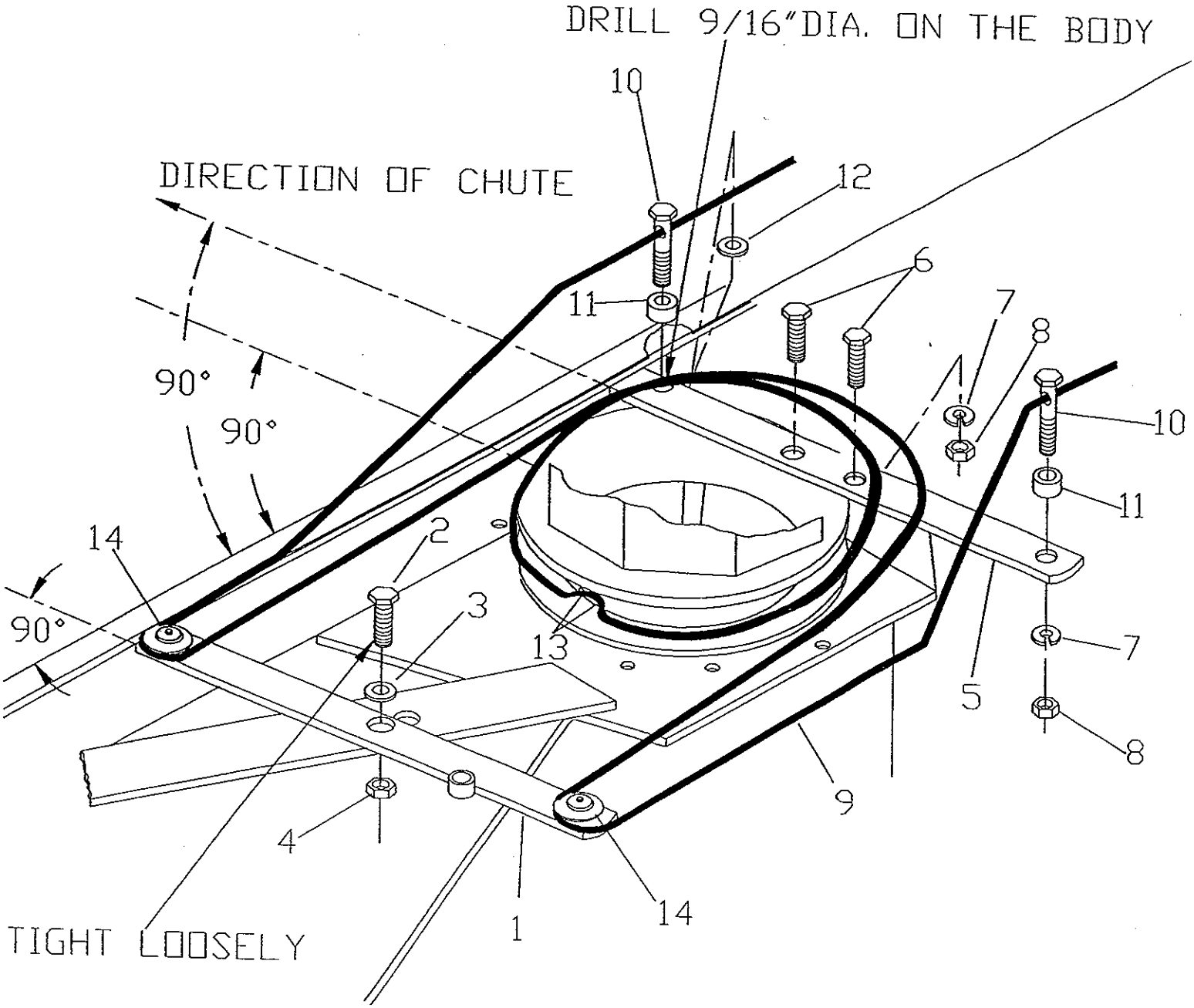
DRILL 9/16"DIA. ON THE BODY
DIRECTION OF CHUTE
90°
90°
90°
TIGHT LOOSELY
1
2
3
4
5
6
7
8
9
10
11
12
13
14

FIGURE 4

OPERATIONS

PREPARING FOR SNOW REMOVAL

1. Read the Operator's Manual carefully before using the tractor and snowblower. Be thoroughly familiar with the controls and proper use of the equipment. Know how to stop the unit and disengage the controls quickly.
2. Make sure the blower is clear of snow before engaging the PTO.
3. Make sure the auger and fan operate freely.
4. Check the oil level in the worm gear box and if necessary, add AGMA 5EP or API GL-5 SAE 90 gear oil.
5. Check the three shearbolts, one on each auger section and one between the fan and gearbox for proper tightness.
6. Adjust so that the snowblower skid shoes run level.
7. Wear adequate winter outer garments while operating equipment.

OPERATING CONTROLS

- **MANUAL CHUTE ROTATION**
  Turning the handle in a clockwise direction, turns the chute in the clockwise direction.

- **RAISING AND LOWERING THE SNOWBLOWER**
  Move the 3 point control lever on right hand side of seat down or forward to lower, and up or rearward to raise

- **PTO OPERATION**
  The mid PTO is activated by pulling up the PTO lever on left side of seat. Push down to disengage.

- **ELECTRIC DEFLECTOR**
  Moving the toggle up or backward raises the deflector. Moving the toggle down or forward lowers the deflector

- **ELECTRIC CHUTE ROTATION**
  Moving the toggle to the right rotates the chute in a clockwise direction to the right. Moving the toggle to the left rotates the chute in a counterclockwise direction to the left.

ADJUSTMENTS

WARNING: To avoid personal injury, be sure the tractor engine is off, the PTO disengaged, and all movement has stopped before making any adjustments.

- **DEFLECTOR ADJUSTMENT**
  Set the angle of deflection according to the distance the snow must be thrown. To set the deflector angle, loosen the two deflector knobs, adjust the deflector to the appropriate angle, and retighten the two knobs securely.

- **SKID SHOE ADJUSTMENT**
  Adjust the snowblower so that the skid shoes run level. Adjust the skid shoes according to the surface being cleared. Adjust downwards for rough or uneven surface conditions so that stones are not thrown with the snow, and adjust upwards for smooth surfaces. Adjust both skid shoes to the same height to keep the cutting edge level.

- **REDUCTION CHAIN TENSION ADJUSTMENT**
  Remove chain cover (fig.3, item 2). Loosen the four bolts securing the reduction box (fig.2, item 6) to the snowblower. Tighten the chain using the tightener bolt (fig.3, item 1) on left hand side of fan housing. Leave approximately 1/4" deflection in the bottom span of chain. Tighten the four bolts securing reduction box to the snowblower.Install the chain cover.

- **WORK AND TRAVEL SPEED**
  Working ground speed will depend on the depth and density of the snow to be cleared. Normally, ground speed will range from 4 to 7 mph for light, dry snowfalls (3-6"), and 1-3 mph for heavy, wet or drifted snow.
  To transport, disengage the PTO, and raise the snowblower to full transport height.

OPERATIONS

SNOW REMOVAL METHODS

WARNING: DO NOT USE HANDS OR FEET TO UNPLUG CHUTE. DO NOT ATTEMPT TO CLEAR PLUGGED CHUTE OF SNOW WHILE TRACTOR ENGINE IS RUNNING. IF THE CHUTE PLUGS, DISENGAGE THE P.T.O., SHUT OFF THE TRACTOR ENGINE, REMOVE THE IGNITION KEY, WAIT FOR ALL MOVEMENT TO STOP, AND THEN CLEAR THE SNOW FROM THE CHUTE.

A definite pattern of operation is required to thoroughly clean the snow area. These patterns will avoid throwing snow in unwanted places as well as eliminating a second removal of snow.

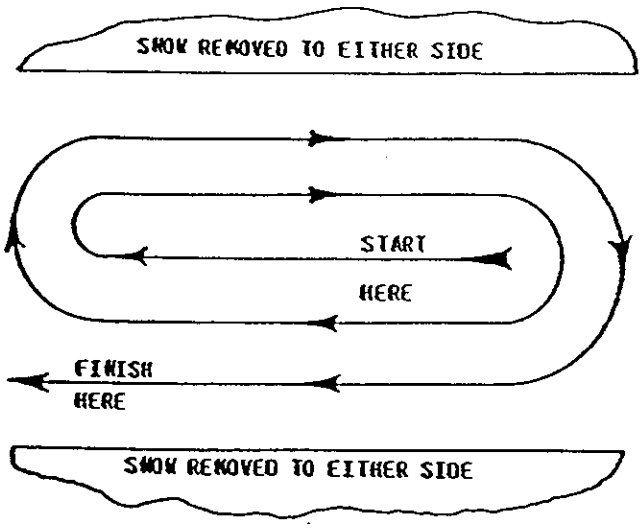

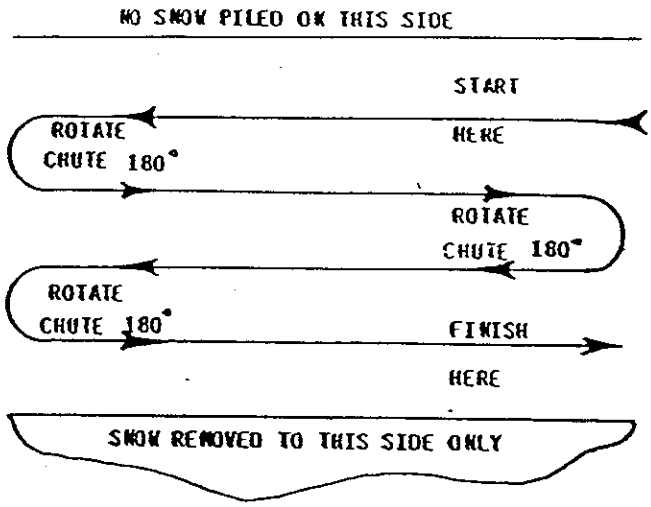

Where it is possible to throw the snow to the left and right (above), as on a long driveway, it is advantageous to start in the middle. Plow from one end to the other, throwing snow to both sides without changing the direction of the discharge guide.

If the snow can only be thrown to one side of the driveway or sidewalk (above), start on the opposite side. At the end of the first pass, rotate the discharge guide 180 degrees for the return pass. At the end of each succeeding pass, rotate the discharge guide 180 degrees to maintain direction of throw in the same area.

MAINTENANCE

TIRE PRESSURE

Inflate front wheel tires to 26-27 psi.
Inflate rear wheel tires to 6-7 psi.

MAINTENANCE SERVICE AND STORAGE

1. Always use the special shear bolts on the fan, and the special grooved shear bolts on the auger sections, as shown on the shearbolt decal inside the collector housing.

2. Check the shear bolts at frequent intervals for proper tightness to be sure the blower is in safe working condition.

3. Never store the tractor with fuel in the fuel tank inside a building where open flame or sparks are present. Allow the engine to cool before storing in any enclosure.

4. Run the snowblower a few minutes after blowing snow to prevent freeze up of the auger and the impeller.

5. Provide adequate blocking before working under the snowblower when in the raised position.

LUBRICATION

1. **GEARBOX:** Check the oil level in the worm gear drive every month. If necessary add AGMA 5EP, or API GL-5 SAE90 gear oil

2. **AUGER SECTIONS:** Grease the fitting on each auger section every 24 hours of operation or once a year.

3. **REDUCTION CHAIN (front mount only):** Lubricate with chain saw chain lubricant every 4 hours of operation and after each use.

4. **PTO DRIVELINE(S):** Grease each u-joint fitting every 8 hours of operation. Slide drive shaft apart and coat sliding surfaces with grease every 8 hours of operation.

END OF SEASON STORAGE

1. Clean the snowblower thoroughly.

2. Repaint all parts from which paint has worn.

3. When the snowblower is dry, oil all moving parts. Apply oil liberally to all surfaces to protect against rust.

4. Lubricate the snowblower as instructed above.

5. List the replacement parts that will be needed before the next season.

6. Store the snowblower in a dry place.

SNOWBLOWER, CHUTE AND HITCH ASSEMBLY

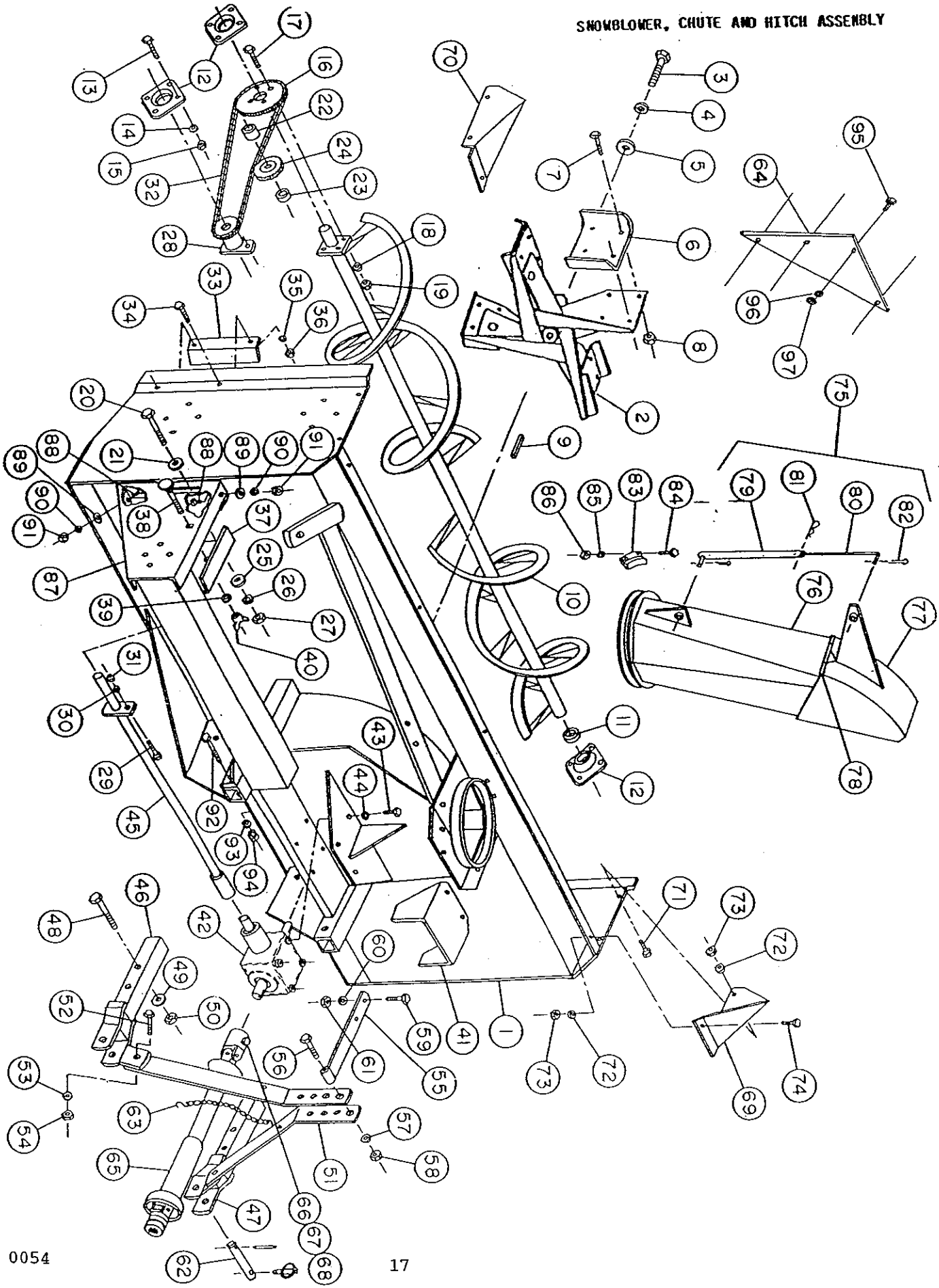

SNOWBLOWER

ITEM	DESCRIPTION	PART#	QTY
1	Frame	655773	1
2	Fan	661818	1
3	Bolt (5/8" x 1 1/2", hex.)	O/L	1
4	Washer (5/8", lock)	O/L	1
5	Washer (11/16"dia. hole, flat)	O/L	1
6	Fan blade	661820	4
7	Bolt (7/16"NC x 1", carriage)	O/L	16
8	Nut (7/16"NC, stover lock)	O/L	16
9	Key (3/8" x 3/8" x 2 3/4")	654174	1
10	Auger assembly	655776	1
11	Spacer	655812	1
12	Bearing with locking collar	654082	3
13	Bolt (1/2"NC x 1 1/2", hex.)	O/L	12
14	Washer (1/2", lock)	O/L	12
15	Nut (1/2"NC, hex.)	O/L	12
16	Sprocket (60A38, 1 1/4"dia. hole)	654007	1
17	Bolt (3/8"NC x 1 1/4", hex.)	O/L	4
18	Washer (3/8", lock)	O/L	4
19	Nut (3/8"NC, hex.)	O/L	4
20	Bolt (3/4"NC x 5", hex.)	O/L	1
21	Washer (13/16"dia. hole, flat)	O/L	1
22	Spacer (1 15/16"lg.)	656911	1
23	Spacer (3/4"lg.)	656912	1
24	Idler sprocket	654010	1
25	Washer (13/16"dia. hole, flat)	O/L	1
26	Washer (3/4", lock)	O/L	1
27	Nut (3/4"NC, hex.)	O/L	1
28	Sprocket with shear plate	654024	1
29	Bolt (5/16"NC x 2", grade 5, hex.)	O/L	1
30	Washer (5/16", lock)	O/L	1
31	Nut (5/16"NC, hex.)	O/L	1
32	Chain (#60 x 93 links)	655788	1
	Connecting link	654839	1
	Half link only	654025	1
33	Chain guard	655778	1
34	Bolt (3/8"NC x 1", hex.)	O/L	2
35	Washer (3/8"NC, lock)	O/L	2
36	Nut (3/8"NC, hex.)	O/L	2
37	Chain cover	655835	1
38	Bolt (3/8"NC x 4 1/2", carriage)	O/L	1
39	Washer (3/8", lock)	O/L	1
40	Nut (3/8"NC, wing)	O/L	1
41	P.T.O. guard	654654	1
42	Gear box assembly	656835	1
43	Bolt (1/2"NC x 1", hex.)	O/L	8
44	Washer (1/2", lock)	O/L	8
45	Auger cross shaft	655786	1
46	Lower hitch left	655780	1
47	Lower hitch right	655789	1
48	Bolt (3/4"NC x 4 ", hex.)	O/L	2
49	Washer (3/4", lock)	O/L	2

* O/L = Obtain locally

SNOWBLOWER

ITEM	DESCRIPTION	PART#	QTY
50	Nut (3/4"NC, hex.)	O/L	2
51	Hitch arm	655779	2
52	Bolt (3/4"NC x 2", hex.)	O/L	2
53	Washer (3/4", lock)	O/L	2
54	Nut (3/4"NC, hex.)	O/L	2
55	Upper hitch	655781	1
56	Bolt (3/4"NC x 4 ", hex.)	O/L	1
57	Washer (3/4", lock)	O/L	1
58	Nut (3/4"NC, hex.)	O/L	1
59	Bolt (3/4"NC x 2 ", hex.)	O/L	1
60	Washer (3/4", hex.)	O/L	1
61	Nut (3/4"NC, hex.)	O/L	1
62	Pin (with linch pin)	655813	2
63	Chain with 2 S-Hooks	654200	1
64	Restrictive plate	661821	1
65	P.T.O. shaft	656864	1
66	Bolt (5/16"NC x 3 1/2", hex.)	O/L	1
67	Washer (5/16", lock)	O/L	1
68	Nut (5/16"NC, hex.)	O/L	1
69	Body brace R.H	656240	1
70	Body brace L.H	656241	1
71	Bolt (3/8"NC x 1 1/4", hex.)	O/L	4
72	Washer (3/8", lock)	O/L	6
73	Nut (3/8"NC, hex.)	O/L	6
74	Bolt (3/8"NC x 1", hex.)	O/L	2
75	Chute assembly	654015	1
76	Chute base	654073	1
77	Deflector	654072	1
78	Pin (3/32"dia. x 1", cotter)	O/L	1
79	Adjustment pipe	654076	1
80	Adjustment rod	654074	1
81	Pin (3/16"dia. x 3 3/4", hair)	O/L	1
82	Pin (1/4"dia. x 2", cotter)	O/L	2
83	Retaining Plate	654077	3
84	Bolt (1/2"NC x 1", hex.)	O/L	6
85	Washer (1/2", lock)	O/L	6
86	Nut (1/2"NC, hex.)	O/L	6
87	Drive shaft support	661822	-
88	Bolt (7/16"NC x 1", carriage)	O/L	2
89	Washer (1/2"dia. hole, flat)	O/L	2
90	Washer (7/16"dia. hole, lock)	O/L	2
91	Nut (7/16"NC, hex.)	O/L	2
92	Bolt (3/4"NC x 4 1/2", hex.)	O/L	1
93	Washer (3/4", lock)	O/L	1
94	Nut (3/4"NC, hex.)	O/L	1
95	Bolt (3/8"NC x 3/4", hex.)	O/L	4
96	Washer (3/8"dia. hole, lock)	O/L	4
97	Nut (3/8"NC, hex.)	O/L	4

* O/L = Obtain locally

MANUAL CHUTE ROTATION

ITEM	DESCRIPTION	PART#	QTY
1	Cable 3/16" dia. x 152"" lg.....	654201	1
2	Rope clamp 3/16" dia.....	654202	1
3	Bolt (1/2"NC x 1", hex.).....	O/L	2
4	Washer (1/2", lock).....	O/L	3
5	Nut (1/2"NC, hex.).....	O/L	3
6	Bolt (1/2"NC x 1 3/4", hex.).....	O/L	1
7	Bolt (5/8"NC x 2 1/2", hex.).....	O/L	1
8	Washer (11/16"dia. hole, flat).....	O/L	2
9	Nut (5/8"NC, nylon lock).....	O/L	1
10	Bolt (1/4" x 1 1/4", hex.).....	O/L	1
11	Nut (lock, nylon).....	O/L	1

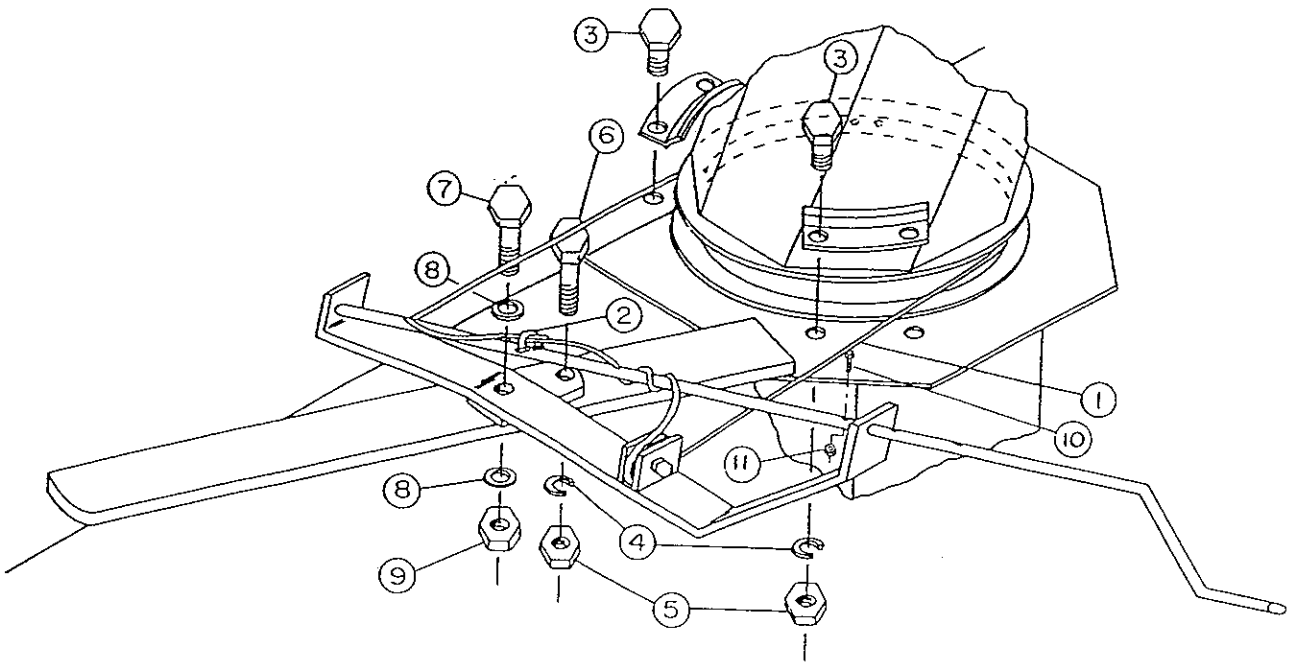

HYDRAULIC CHUTE ROTATION

REF	DESCRIPTION	PART#	QTY
1	Rotation arm assembly	656805	1
2	Bolt (5/8"NC x 2"lg.)	O/L	1
3	Washer (11/16"dia., PTD)	O/L	1
4	Nut (5/8"NC, PTD, lock nylon)	O/L	1
5	Shim	657242	1
6	Bolt (1/2"NC x 1 1/2"lg., hex. PTD)	O/L	2
7	Washer (1/2"dia., lock)	O/L	4
8	Nut (1/2"NC, hex. PTD)	O/L	4
9	Cable (3/16"dia. x 182"lg.)	657243	1
10	Special bolt (1/2"NC x 2"lg., hex., Gr2, PTD)	654199	2
11	Tubing (3/4"O.D. x .093" mur x 1/2"lg.)	656255	2
12	Washer (9/16"dia., flat, PTD)	O/L	1

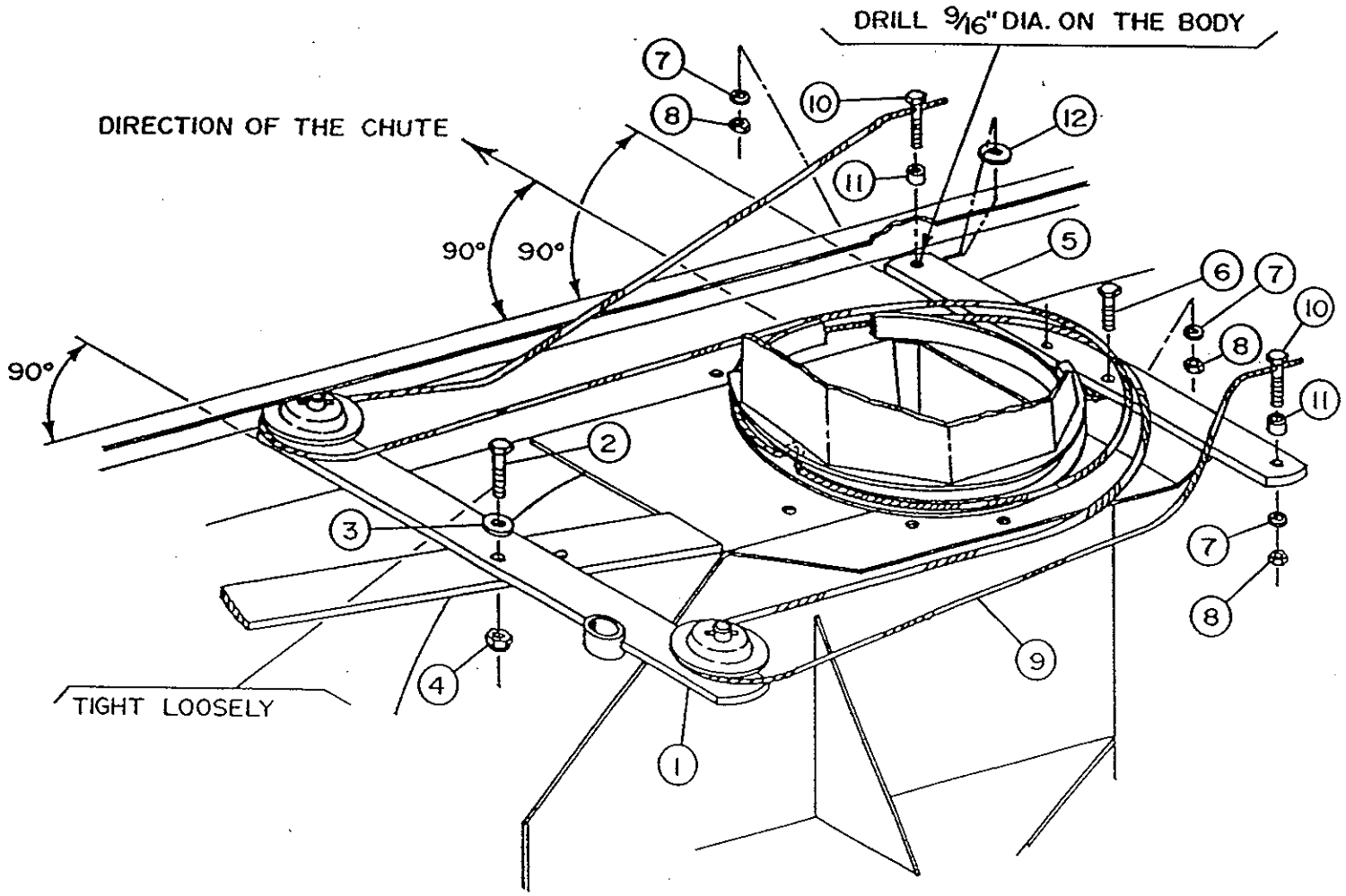

DOUBLE AUGER CONVERSION KIT

ITEM	DESCRIPTION	PART#	QTY
1	Snowblower frame extension	655774	1
2	Bolt (3/8"NC x 1", hex.)	O/L	9
3	Washer (3/8", lock)	O/L	9
4	Nut (3/8"NC, hex.)	O/l	9
5	Auger assembly	655777	1
6	Bearing	654082	2
7	Bolt (1/2"NC x 1 1/2", hex.)	O/L	8
8	Washer (1/2", lock)	O/L	8
9	Nut (1/2"NC, hex.)	O/L	8
10	Sprocket No. 60, 32 teeth	654167	2
11	Bolt (3/8"NC x 1 1/4", hex.)	O/L	8
12	Washer (3/8", lock)	O/L	8
13	Nut (3/8"NC, hex.)	O/L	8
14	Auger drive chain No. 60, 81 links	654788	1
15	Connecting link	655025	1
16	Half-link	654839	1
17	Idler sprocket	654010	1
18	Bolt (5/8"NC x 2 1/2", hex.)	O/L	1
19	Washer (5/8", lock)	O/L	1
20	Nut (5/8"NC, hex.)	O/L	1
21	Washer (11/16", flat)	O/L	2
22	Adjuster	655782	1
23	Bolt (3/8"NC x 1 1/4", hex.)	O/L	2
24	Washer (3/8", lock)	O/L	2
25	Nut (3/8"NC, hex.)	O/L	2
26	Chain guard	655787	1
27	Bolt (3/8"NC x 1", hex.)	O/L	3
28	Washer (3/8", lock)	O/L	3
29	Nut (3/8"NC, hex.)	O/L	3

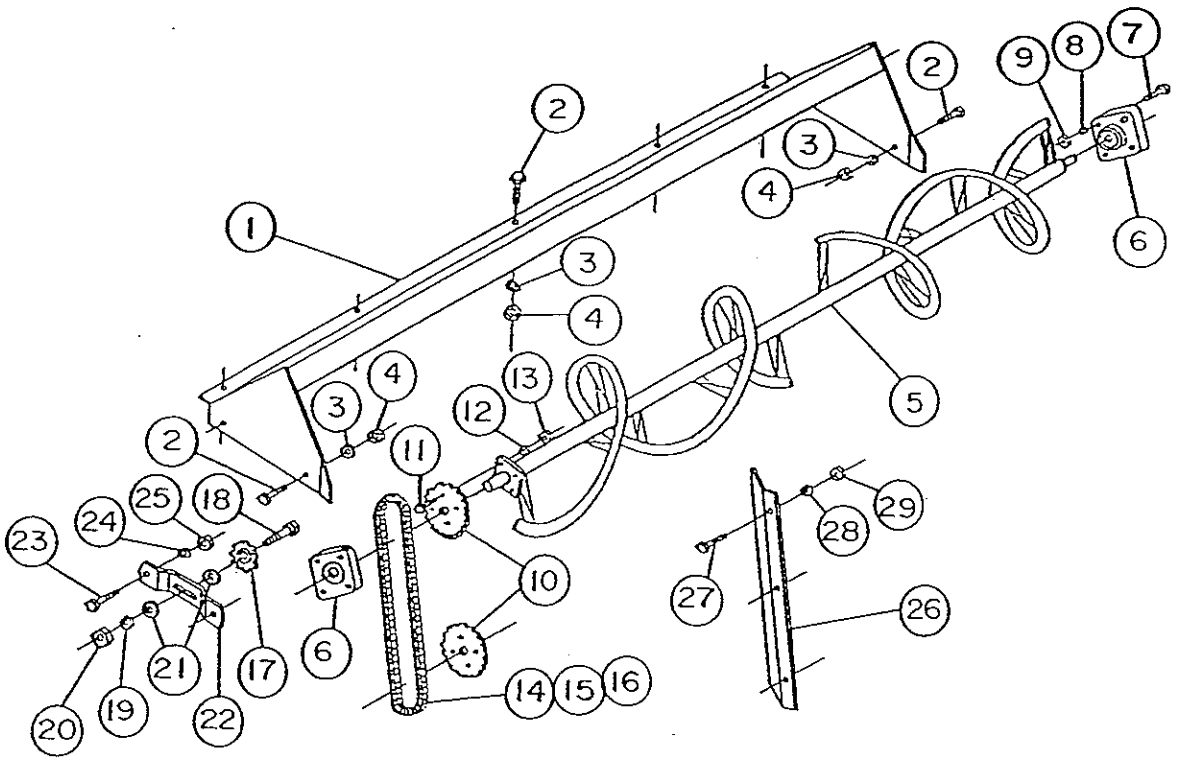

CUTTING EDGE AND SKID SHOES

ITEM	DESCRIPTION	PART#	QTY
1	Cutting edge	655909	1
2	Skid shoe L.H.	655894	1
3	Skid shoe R.H.	655895	1
4	Bolt (7/16"NC x 1 1/2", plow)	O/L	15
5	Nut (7/16"NC, hex.)	O/L	15
6	Washer (7/16", lock)	O/L	15

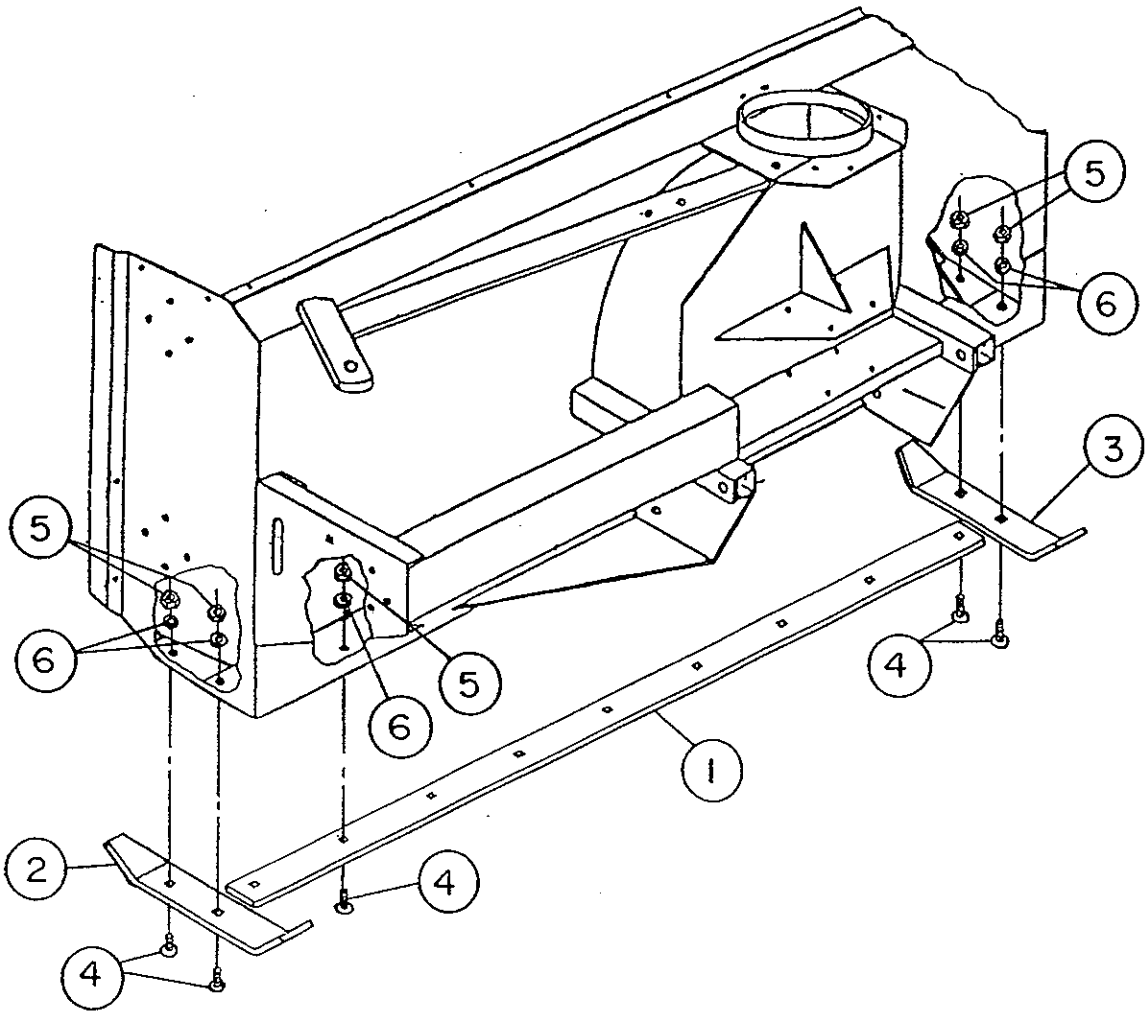

GEAR BOX (656835)

ITEM	DESCRIPTION	PART#	QTY
1	Casing	656640	1
2	Dust excluder 35 x 72 x 12	656650	1
3	External circlip 35 UNI7435	656652	1
4	Shim 35.3 x 43	656649	2
5	Bearing 6207	656653	1
6	Spacer	656648	1
7	Internal circlip 72 UNI7437	656654	1
8	Bearing 30207	656647	1
9	Shaft	656651	1
10	Gear Z 18	656645	1
11	External circlip 40 UNI7435	656646	1
12	Bearing 30208	656641	2
13	Shim 65.3 x 79.7	656644	1
14	Internal circlip 80 UNI7437	656642	2
15	Dust excluder 40 x 80 x 12	656643	2
16	Shaft	657192	1
17	Gear Z 18	656657	1
18	Shim 40.3 x 51.5	656655	1
19	Gasket	656658	1
20	Cover	656660	1
21	Bolt (M10 x 14, hex.)	656659	4
22	Oil plug 3/8" NPT	655259	2
23	Oil filter plug	656662	1

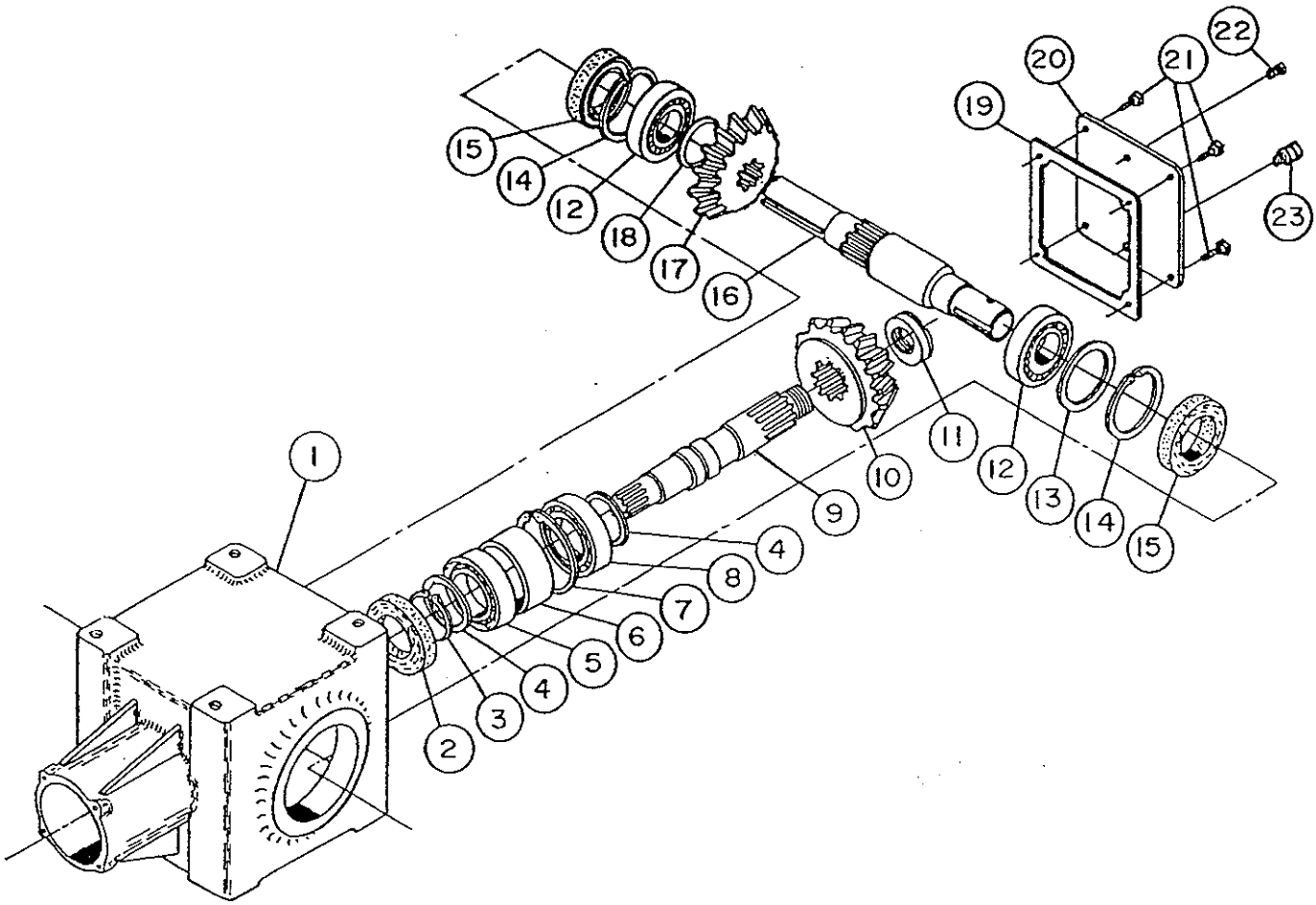

P.T.O. SHAFT (656864)

ITEM	DESCRIPTION	PART#	QTY
1	Quick disconnect yoke assembly	657193	1
2	Safety pin	657195	2
3	Quick disconnect	657194	1
4	Quick disconnect yoke	657~~654~~196	1
5	Ball	657197	23
6	Grease fitting	657198	1
7	Shear bolt	657199	1
8	Universal joint kit	657200	2
9	Snap ring	657201	8
10	Grease fitting	657202	2
11	Yoke for female shaft	657203	1
12	Pin	657204	1
13	Female shaft	657205	1
14	Male shaft	657206	1
15	Pin	657207	1
16	Yoke for male shaft	657208	1
17	Yoke of snowblower	657209	1
18	Quick disconnect and female shaft assembly	657210	1
19	Yoke and male shaft assembly	657211	1
20	Shield assembly (bondioli)	657221	1
21	Outer shield and female shaft assembly	657222	1
22	Inner shield and male shaft assembly	657223	1
23	Safety Pin	657217	1

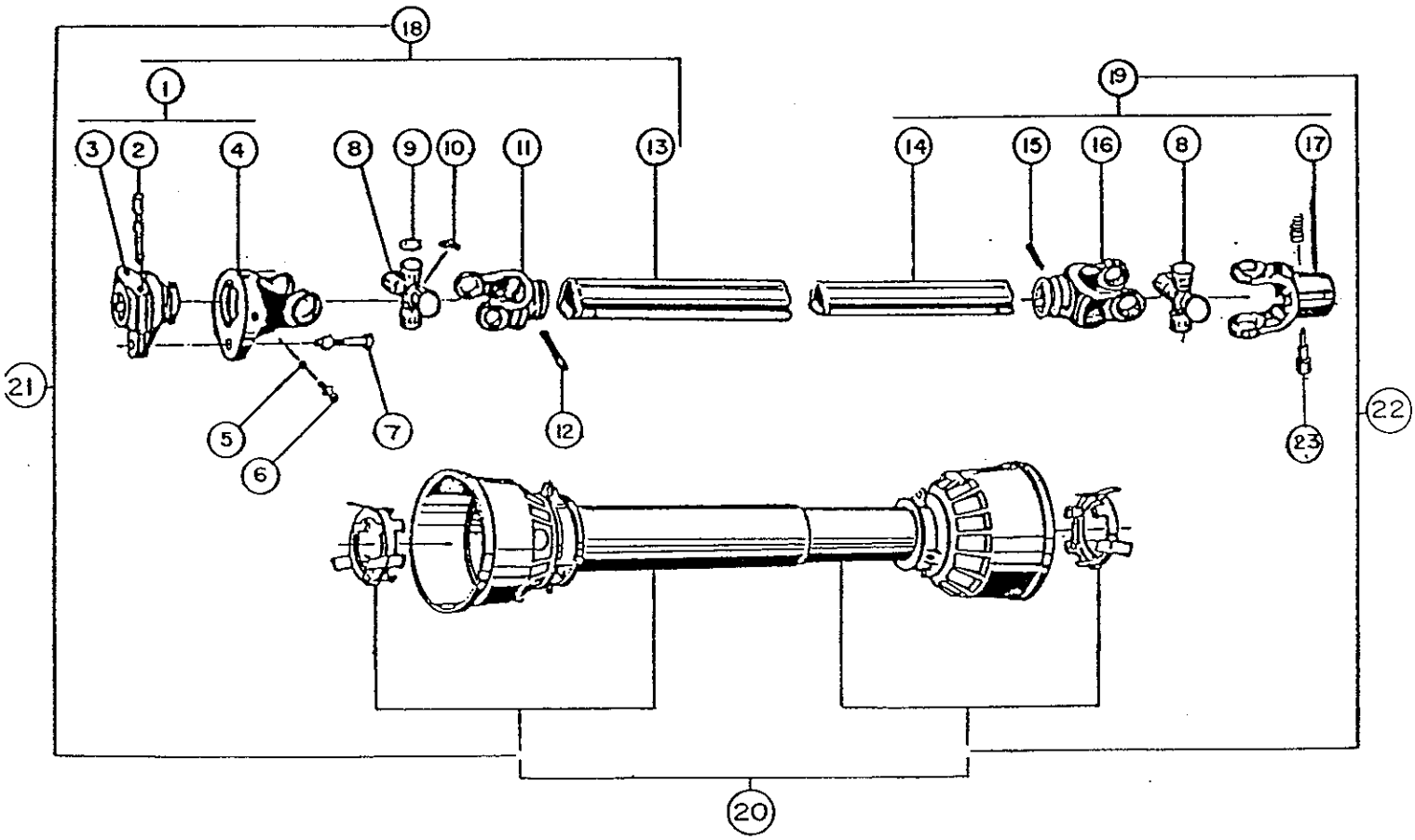

DECALS

ITEM	DESCRIPTION	PART#	QTY
1	#21 IMPORTANT	655834	1
2	#86 DANGER	656779	1
3	#87 DANGER	656780	2
4	#88 DANGER	656781	1
5	#229 WARNING	660988	1
6	#230 MISE EN GARDE	660989	1

⚠ MISE EN GARDE

NÉGLIGER DE SUIVRE LES PROCÉDURES SÉCURITAIRES D'UTILISATION PEUT ENTRAÎNER DES BLESSURES.

- POUR UNE UTILISATION SÉCURITAIRE SUIVRE TOUTES LES INSTRUCTIONS D'UTILISATION ET PRÉCAUTIONS SÉCURITAIRES DANS LE MANUEL DE L'OPÉRATEUR.
- PORTER DES LUNETTES DE SÉCURITÉ EN TOUT TEMPS.
- GARDER MAINS, PIEDS ET VÊTEMENTS ÉLOIGNÉS DES PIÈCES MOTRICES.
- ARRÊTER LE MOTEUR AVANT DE QUITTER LA POSITION DE L'OPÉRATEUR.
- ATTENDRE QUE TOUS LES MOUVEMENTS SOIENT ARRÊTÉS AVANT D'AJUSTER, LUBRIFIER, NETTOYER OU DÉBLOQUER LA MACHINE.
- GARDER L'ENDROIT DÉGAGÉ DE TOUTES PERSONNES ET ANIMAUX.
- GARDER TOUS LES ÉCRANS PROTECTEURS EN PLACE.
- JAMAIS DIRIGER L'ÉVACUATION VERS DES PIÉTONS, BÂTIMENTS, AUTOMOBILES, ETC.
- TOUJOURS UTILISER UN MASQUE À POUSSIÈRE DANS UN ENVIRONNEMENT POUSSIÉREUX.
- GARDER TOUTES LES MATIÈRES PLASTIQUES ÉLOIGNÉES DE LA CHALEUR INTENSE ET DES FLAMMES.
- NE JAMAIS PERMETTRE DE PASSAGERS SUR CETTE MACHINE. 230

⚠ DANGER

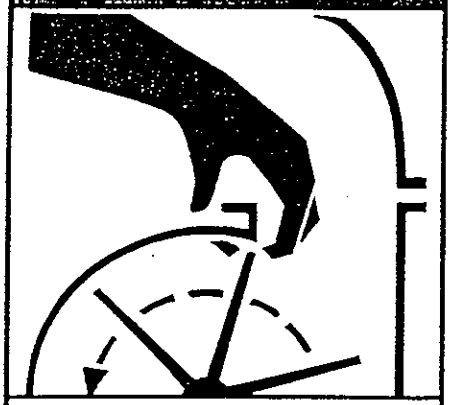

TO AVOID SERIOUS INJURY:
KEEP HANDS OUT OF THIS DISCHARGE CHUTE WHILE ENGINE IS RUNNING

POUR ÉVITER DES BLESSURES GRAVES:
GARDER LES MAINS ÉLOIGNÉES DE CETTE GOULOTTE LORSQUE LE MOTEUR EST EN MARCHE 86

⚠ DANGER

ROTATING DRIVELINE
CONTACT CAN CAUSE DEATH
KEEP PEOPLE AND CLOTHING WELL CLEAR
DO NOT OPERATE WITHOUT–

- ALL DRIVELINE, TRACTOR AND EQUIPMENT SHIELDS IN PLACE
- DRIVELINES SECURELY ATTACHED AT BOTH ENDS
- DRIVELINE SHIELDS THAT TURN FREELY ON DRIVELINE

TRANSMISSION ROTATIVE À CARDAN
TOUT CONTACT PEUT CAUSER LA MORT
TENIR VÊTEMENTS ET PERSONNES À L'ÉCART
NE PAS OPÉRER SANS–

- QUE TOUS LES PROTECTEURS DU TRACTEUR DE L'ÉQUIPEMENT ET DE L'ARBRE À CARDAN SOIENT EN PLACE
- L'ARBRE À CARDAN FIXÉ SOLIDEMENT À CHAQUE BOUT
- QUE LES PROTECTEURS TOURNENT LIBREMENT SUR L'ARBRE À CARDAN 88

⚠ WARNING

FAILURE TO FOLLOW SAFE OPERATING PROCEDURES MAY RESULT IN INJURY.

- FOR SAFE OPERATION FOLLOW ALL OPERATING INSTRUCTIONS ANS SAFETY PRECAUTIONS IN OPERATOR'S MANUAL.
- EYE PROTECTION MUST BE WORN AT ALL TIMES.
- KEEP HANDS, FEET AND CLOTHING AWAY FROM POWER DRIVEN PARTS.
- STOP ENGINE BEFORE LEAVING OPERATOR POSITION.
- WAIT FOR ALL MOVEMENTS TO STOP BEFORE STARTING TO ADJUST, LUBRICATE, CLEAN OR UNCLOG THE MACHINE.
- KEEP THE AREA OF OPERATION CLEAR OF ALL PERSONS AND ANIMALS.
- KEEP ALL GUARDS AND SHIELDS IN PLACE.
- NEVER DIRECT DISCHARGE TOWARD BYSTANDERS, BUILDINGS, CARS ETC.
- ALWAYS USE A DUST MASK WHEN WORKING IN DUSTY CONDITIONS.
- KEEP PLASTIC MATERIALS AWAY FROM INTENSE HEAT AND OPEN FLAME.
- NEVER ALLOW PASSENGERS ON THE ATTACHMENT. 229

IMPORTANT
Before using:
- Oil level must be checked.
- Fill with " AGMA No 5 EP " extreme pressure oil
- Read instructions manual.

IMPORTANT
Avant usage:
- Vérifier niveau d'huile.
- Remplir avec de l'huile pour extrême pression " AGMA No 5 EP "
- Lire manuel d'instructions. 21

⚠ DANGER

AVOID INJURY FROM ROTATING AUGER
KEEP HANDS, FEET AND CLOTHING AWAY

POUR ÉVITER DES BLESSURES GRAVES:
GARDER LES MAINS, LES PIEDS ET LES VÊTEMENTS ÉLOIGNÉS DES VIS SANS FIN 87

TORQUE SPECIFICATION TABLE

GENERAL TORQUE SPECIFICATION TABLE (Revised 2-74)

USE THE FOLLOWING TORQUES WHEN SPECIAL TORQUES ARE NOT GIVEN

NOTE: These values apply to fasteners as received from supplier, dry, or when lubricated with normal engine oil. They do not apply if special graphited or moly disulphide greases or other extreme pressure lubricants are used. This applies to both UNF and UNC threads.

SEE Grade No.		2				5				8 *			
BOLT HEAD IDENTIFICATION MARKS AS PER GRADE NOTE: MANUFACTURING MARKS WILL VARY													
		Torque				Torque				Torque			
Bolt Size		Pounds Feet		Newton-Meters		Pounds Feet		Newton-Meters		Pounds Feet		Newton Meters	
Inches	Millimeters	Min.	Max.	Min.	Max.	Min.	Max.	Min.	Max.	Min.	Max.	Min.	Max.
1/4	6.35	5	6	6.8	8.13	9	11	12.2	14.9	12	15	16.3	30.3
5/16	7.94	10	12	13.6	16.3	17	20.5	23.1	27.8	24	29	32.5	39.3
3/8	9.53	20	23	27.1	31.2	35	42	47.5	57.0	45	54	61.0	73.2
7/16	11.11	30	25	40.7	47.4	54	64	73.2	86.8	70	84	94.9	113.9
1/2	12.70	45	52	61.0	70.5	80	96	108.5	130.2	110	132	149.2	179.0
9/16	14.29	65	75	88.1	101.6	110	132	149.2	179.0	160	192	217.0	260.4
5/8	15.88	95	105	128.7	142.3	150	180	203.4	244.1	220	264	298.3	358.0
3/4	19.05	150	185	203.3	250.7	270	324	366.1	439.3	380	456	515.3	618.3
7/8	22.23	160	200	216.8	271.0	400	480	542.4	650.9	600	720	813.6	976.3
1	25.40	250	300	338.8	406.5	580	696	786.5	943.8	900	1080	1220.4	1464.5
1-1/8	25.58	—		—		800	880	1084.8	1193.3	1280	1440	1735.7	1952.6
1-1/4	31.75	—		—		1120	1240	1518.7	1681.4	1820	2000	2467.9	2712.0
1-3/8	34.93	—		—		1460	1680	1979.8	2278.1	2380	2720	3227.3	3688.3
1-1/2	38.10	—		—		1940	2200	2630.6	2983.2	3160	3560	4285.0	4827.4

* Thick nuts must be used with Grade 8 bolts.

METRIC BOLT TORQUE SPECIFICATIONS

Size of screw	Grade No.	Coarse thread			Fine thread		
		Pitch (mm)	Pounds Feet	Newton-Meters	Pitch (mm)	Pounds Feet	Newton-Meters
M6	4T (4)	1.0	3.6–5.8	4.9–7.9	—	–	–
	7T (7)		5.8–9.4	7.9–12.7		–	–
	8T (8) (11)		7.2–10	9.8–13.6		–	–
M8	4T	1.25	7.2–14	9.8–19	1.0	12–17	16.3–23
	7T		17–22	23–29.8		19–27	25.7–36.6
	8T		20–26	27.1–35.2		22–31	29.8–42
M10	4T	1.5	20–25	27.1–33.9	1.25	20–29	27.1–39.3
	7T		34–40	46.1–54.2		35–47	47.4–63.7
	8T		38–46	51.5–62.3		40–52	54.2–70.5
M12	4T	1.75	28–34	37.9–46.1	1.25	31–41	42–55.6
	7T		51–59	69.1–79.9		56–68	75.9–92.1
	8T		57–66	77.2–89.4		62–75	84–101.6
M14	4T	2.0	49–56	66.4–75.9	1.5	52–64	70.5–86.7
	7T		81–93	109.8–126		90–106	122–143.6
	8T		96–109	130.1–147.7		107–124	145–168
M16	4T	2.0	67–77	90.8–104.3	1.5	69–83	93.5–112.5
	7T		116–130	157.2–176.2		120–138	162.6–187
	8T		129–145	174.8–196.5		140–158	189.7–214.1
M18	4T	2.0	88–100	119.2–136	1.5	100–117	136–158.5
	7T		150–168	203.3–227.6		177–199	239.8–269.6
	8T		175–194	237.1–262.9		202–231	273.7–313
M20	4T	2.5	108–130	146.3–176.2	1.5	132–150	178.9–203.3
	7T		186–205	252–277.8		206–242	279.1–327.9
	8T		213–249	288.6–337.4		246–289	333.3–391.6